REV.	ECN NO.	REVISED	DATE

RoHs 环保

A型

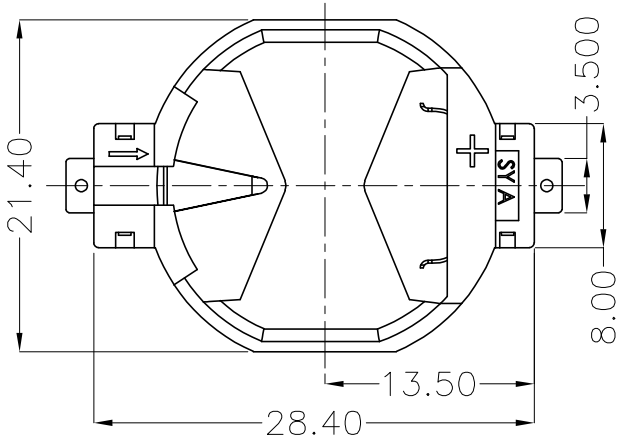

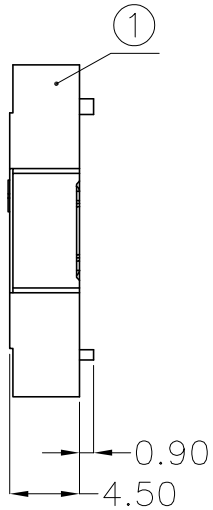

1.MATERIAL:
- a.HOUSING:PPA
- b.CONTACT:PHOSPHOR BRONZE (SURFACE PLATING:Au1u") SEE ORDERING INFORMATION

2.ELECTRIC:
- a.CONTACT RESISTANCE: 30 MILLIOHMS MAX
- b.INSULATION RESISTANCE: 100 MEGA OHMS MIN
- c.DIELECTNIC VOLTAGE: 500V AC ONE SEC LEVEL
- d.OPERATING TEMPERATURE: −25°C~ +85°C

ORDERING INFORMATION

BS-11-B***001

- 电池座系列
- BS-11系列
- SMT 180° TYPE
- MATERIAL:
  - 1A-PBT BLACK
  - 1B-PA66 BLACK
  - 2A-PPA BROWN
  - 2B-PPA BLACK
  - 2C-PPA WHITE
  - 3A-PPS BROWN
  - 3B-PPS BLACK
  - 4A-LCP WHITE
  - 4B-LCP BLACK
  - 5A-PA6T WHITE
  - 5B-PA6T BLACK
- PLATING:
  - A-Au1U"
  - J-Ni100U"~120U"
  - K-Sn100U"~120U"

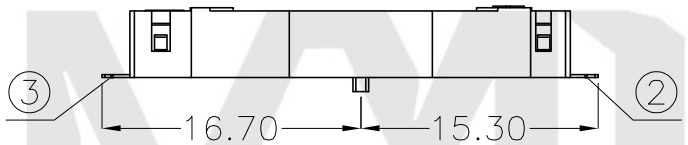

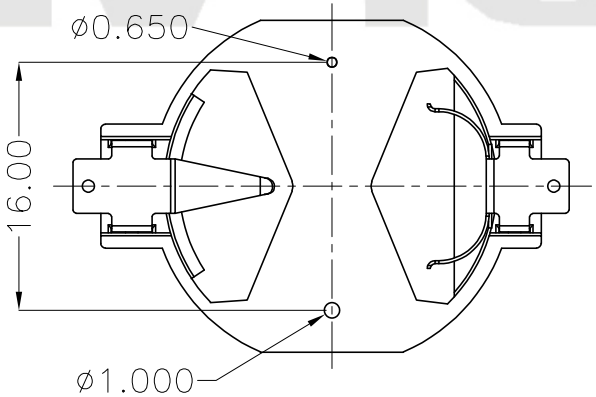

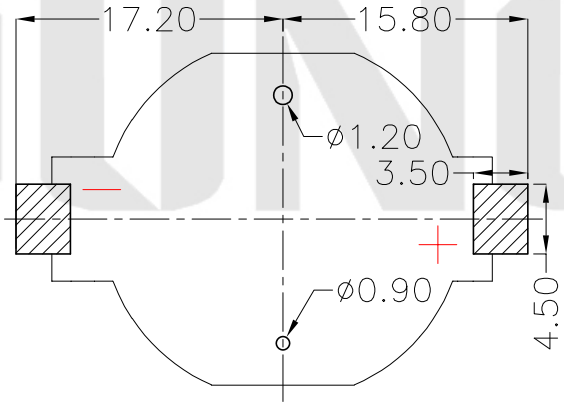

PCB Layout Diagram
Top View

工程部
2018-10-24
LQ. HUANG

NO.	PART NAME	Q'TY	MATERIAL	PLATING & COLOR
3	TERMINAL(−)	1	PHOSPHOR BRONZE, T=0.20mm	Gold Plating and Ni Under-Plating
2	TERMINAL(+)	1	PHOSPHOR BRONZE, T=0.20mm	Gold Plating and Ni Under-Plating
1	HOUSING	1	PPA	WHITE

UNLESS OTHERWISE SPECIFIED TOLERANCES

DECIMALS: X :±0.30, X.X :±0.25, X.XX :±0.20, X.XXX :±0.10
ANGLES: X :±1°, X.X :±0.5°

WEIGHT: 0.98g

SHEET 1 OF 1

MYOUNG 美阳 www.meiyangdz.com

DSND	YangFeng	DATE	2017-06-28	TITLE: BS-2032-11 Au SMT
CHKD	ZhouRuicai	DATE	2017-06-28	
APVD	XueShunyong	DATE	2017-06-28	PART NO.: BS-11-B2CA001
SCALE: 2:1	SIZE: A4	VIEW:		
UNIT: mm	REV.: A/0	OBJECT: MY		DRAW NO.:MY-CP-0151

MYOUNG 美阳